UNITED STATES PATENT AND TRADEMARK OFFICE

BEFORE THE PATENT TRIAL AND APPEAL BOARD

JST Performance, Inc. d/b/a/ Rigid Industries
Petitioner,

v.

U.S. PHILIPS CORPORATION
Patent Owner

Patent No. 6,250,774 (Claims 1-7 and 9-15)
Issued: June 26, 2001
Inventors: Begemann, et al
Title: Luminaire
Inter Partes Review No. IPR2014-00874

PETITION FOR *INTER PARTES* REVIEW

Mail Stop *Inter Partes* Review
Commissioner for Patents
P.O. Box 1450
Alexandria, VA 22313-1450

Dear Sir:

Pursuant to the provisions of 35 U.S.C. §§ 311-319, JST Performance, Inc. d/b/a/ Rigid Industries ("Petitioner") hereby petitions the Patent Trial and Appeal Board to institute an *Inter Partes* Review of claims 1-7 and 9-15 of United States Patent No. 6,250,774 ("the '774 Patent," Ex. RGD-1001), which issued on June 26, 2001, to Simon H. A. Begemann *et al.*, resulting from United States Patent

Application No. 09/012,319 filed on January 23, 1998. According to USPTO records, the '774 Patent is assigned to U.S. Philips Corporation.

TABLE OF CONTENTS

I. Mandatory Notices ...……4

A. Real Party-in-Interest... …..……..4

B. Related Matters ..…..……4

C. Lead and Back-up Counsel and Service Information ……..4

II. Grounds for Standing ..……4

III. Relief Requested ...……....5

IV. Reasons for the Requested Relief ...……5

A. Summary of Petition ..……..5

1. Background of the '774 Patent …….……6

2. Person of Ordinary Skill in the Art ….…..……7

3. Overview of the '774 Patent ….…..……...7

4. Turnbull Anticipates the Claims of the '774 Patent ……10

B. Identification of Challenges ...……13

1. Challenged Claims …...……13

2. Statutory Grounds for Challenges ……..……..13

3. Claim Construction ….……...……..15

C. Unpatentability of Claims 1-7 and 9-15 of the '774 Patent …..……17

V. Conclusion ……..……43

I. Mandatory Notices

A. Real Party-in-Interest

The real party-in-interest is JST Performance, Inc. d/b/a/ Rigid Industries.

B. Related Matters

None.

C. Lead and Back-up Counsel and Service Information

Lead Counsel

Michael T. Wallace
JST Performance, Inc.
d/b/a/ Rigid Industries
779 North Colorado Street
Gilbert, Arizona 85233
Phone: (480) 655-0100 x1067
Fax: (480) 832-0606
mwallace@rigidindustries.com

USPTO Customer No. 116181
USPTO Reg. No. 45,420

Back-up Counsel

Jerry Fellows
Greenberg Traurig, LLP
2375 East Camelback Road
Suite 700
Phoenix, AZ 85016
Phone: (602) 445-8383
Fax: (602) 445-8692
fellowsj@gtlaw.com

USPTO Customer No. 116181
USPTO Reg. No. 36,133

II. Grounds for Standing

Petitioner certifies that the '774 Patent for which review is sought is available for inter partes review and that Petitioner is not estopped from requesting an inter partes review challenging the patent claims on the grounds identified in this Petition. Petitioner further submits that, pursuant to 35 U.S.C. § 315(b), it is not barred from filing this Petition because Petitioner (including any privies) was not served with a complaint asserting infringement of the '774 Patent more than one year prior to the

filing of this Petition. The '774 Patent issued more than 9 months ago and was not the subject of a post-grant review.

III. Relief Requested

Petitioner asks that the Board review the accompanying prior art and analysis, institute a trial for *Inter Partes* Review of claims 1-7 and 9-15 of the '774 Patent, and cancel those claims as invalid under 35 U.S.C. §§ 102 and/or 103.

IV. Reasons for the Requested Relief

A. Summary of Petition

The '774 Patent describes a luminaire having at least one lighting module accommodated within a housing of the luminaire for illuminating an object. The lighting module includes a set of lighting units, where each lighting unit includes at least a light emitting diode (LED) chip and an optical system in cooperation with the LED. Each LED supplies a luminous flux of at least five lumens.

This luminaire was not new in late January 1997 when the priority document preceding the application leading to the '774 Patent was filed. Petitioner has identified several earlier patents and printed publications that describe the luminaire claimed in the '774 Patent. These prior art patents and printed publications both describe the claimed system in full and render it obvious. Specifically, U.S. Patent No. 5,803,579 to Turnbull et al. ("Turnbull") anticipates claims 1-5, 7, 9 and 11-15. Claims 1-5, 7, 9 and 11-15 are also rendered obvious by the combination of

Turnbull and the printed publication entitled "Very high-efficiency semiconductor wafer-bonded transparent-substrate $(Al_xGa_{1-x})_{0.5}In_{0.5}/GaP$ light-emitting diodes" published May 23, 1994 by the American Institute of Physics as authored by F.A. Fish et al. ("the Fish Publication"). Claim 6 is rendered obvious by the combination of Turnbull and U.S. Patent No. 4,698,730 to Sakai et al. ("Sakai"). Claim 10 is rendered obvious by the combination of Turnbull and U.S. Patent No. 5,130,531 to Ito et al. ("Ito").

1. Background of the '774 Patent

The '774 Patent issued on June 26, 2001, on an application filed by Simon H. A. Begemann et al. on January 23, 1998. (Ex. RGD-1001 ("the '774 Patent").) The '774 Patent claims priority to a patent application filed on January 23, 1997 in the European Patent Office having application number 97200149 (*Id.*) The '774 Patent was subject to a restriction requirement on July 9, 1999 (Ex. RGD-1008 at Election of Species Requirement) to which claims 1-4 and 15-16 corresponding to FIGs. 1A, 1B, 2-4 were elected on July 20, 1999 (*Id.* at Election of Species). The USPTO issued a Non-Final Rejection on November 26, 1999 in which claims 1-4 and 15 were rejected and claims 5-14 and 16 were withdrawn. (*Id.* at Non-Final Rejection). A response to the Non-Final Rejection was filed on January 31, 2000. (*Id.* at Amendment Under 37 C.F.R. §1.111). The USPTO issued a Final Rejection on April 11, 2000, in which the application was found to be in condition for allowance

except for the existence of informalities and withdrawn claims. (*Id*. at Final Rejection). A response after final action was filed on May 24, 2000. (*Id*. at Amendment Under 37 C.F.R. §1.116). The USPTO issued a notice of allowance on June 7, 2000. (*Id*. at Notice of Allowability). A request for a Continued Prosecution Application was filed on August 8, 2000, along with an Information Disclosure Statement. (*Id*. at Continued Prosecution Application). The USPTO issued a second notice of allowance on January 3, 2001. (*Id*. at Notice of Allowability).

2. Person of Ordinary Skill in the Art

The level of ordinary skill in the art for the '774 Patent is 1) a person who holds a bachelor's degree in electrical/mechanical engineering; and/or 2) one who has at least ten years of experience researching and designing non-imaging optical systems with an emphasis on LED-based illumination systems.

3. Overview of the '774 Patent

The '774 Patent has two independent claims and thirteen dependent claims. (the '774 Patent, 9:30-10:62). The '774 Patent also has figures 1A, 1B, 2-9, 10A, 10B, 11 and 12. The following illustration maps the claim language of independent claim 1 to the luminaire shown in FIG. 2 of the '774 Patent:

'774 Patent Claim 1			
A	A luminaire comprising	**E**	the lighting module comprising a set of lighting units,
B	a housing	**F**	each lighting unit comprising at least one LED chip and

C	with a light emission window,	**G**	an optical system cooperating therewith, the lighting units illuminating portions of the object during operation, each said LED chip supplying a luminous flux of at least 5 lm during operation.
D	at least one lighting module in said housing for illuminating an object outside said housing,		

'774 Patent Figure 2
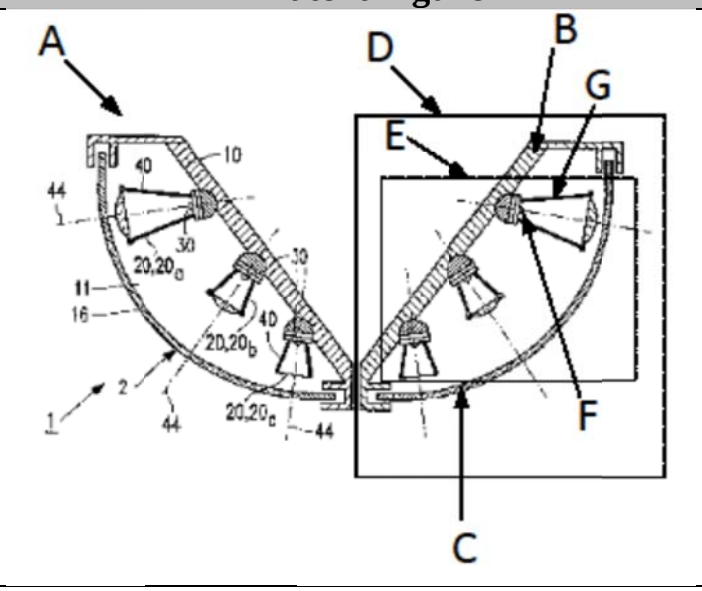

As shown above, the '774 Patent claims a luminaire (A) comprising a housing (B) with a light emission window (C). The '774 Patent further claims at least one lighting module (D) that exists within housing (B) for illuminating an object outside of housing (B), where each lighting module (D) comprises a set of lighting units (E). The '774 Patent further claims a lighting unit comprising at least one LED chip (F) and an optical system (G) cooperating therewith. Lastly, the '774 Patent further

claims each lighting unit illuminates portions of an object during operation and each LED chip supplies a luminous flux of at least 5 lm during operation.

The following claim chart illustrates independent claim 14 by mapping the claim language to the luminaire shown in FIG. 2 of the ‘774 Patent:

‘774 Patent Claim 14			
A	A lighting system comprising	**E**	a lighting module in said housing for illuminating an object outside of said housing said module comprising a plurality of lighting units
B	at least one luminaire comprising	**F**	each comprising at least one LED chip and
C	a housing	**G**	an optical system, said LED chips each supplying a luminous flux of at least 5 lm during operation, said luminous flux being directed through a respective optical system toward respective portion of said object.
D	with a light emission window and		

‘774 Patent Figure 2

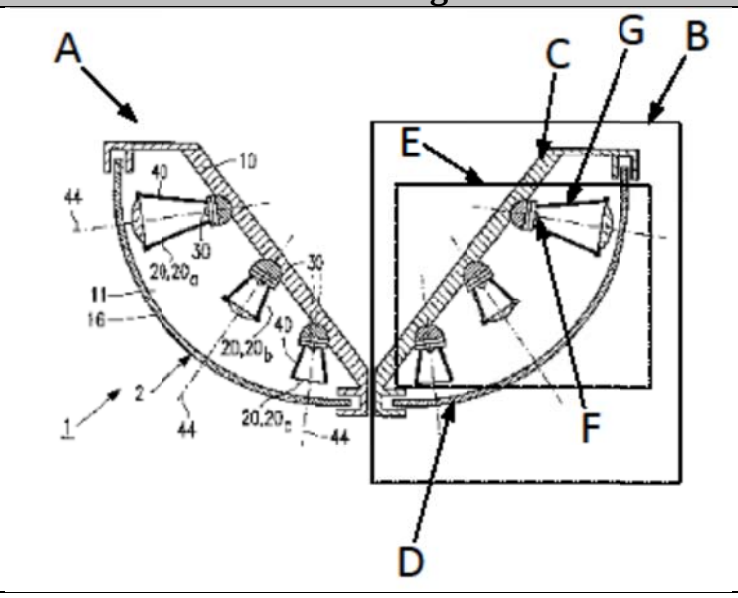

As shown above, the '774 Patent claims a lighting system (A) comprising at least one luminaire (B) comprising a housing (C) with a light emission window (D). The '774 Patent further claims a lighting module (E) in said housing for illuminating an object outside of said housing, said module comprising a plurality of lighting units each comprising at least one LED chip (F) and an optical system (G). Lastly, the '774 Patent further claims said LED chips each supplying a luminous flux of at least 5 lm during operation, said luminous flux being directed through a respective optical system toward respective portion of said object.

4. Turnbull Anticipates the Claims of the '774 Patent

The '774 Patent is anticipated by U.S. Patent No. 5,803,579 to Turnbull. As shown below, Turnbull teaches the luminaire claimed by the '774 Patent. The following illustration compares claim 1 of the '774 Patent to Figure 1 of Turnbull.

'774 Patent Claim 1			
A	A luminaire comprising	**E**	the lighting module comprising a set of lighting units,
B	a housing	**F**	each lighting unit comprising at least one LED chip and
C	with a light emission window,	**G**	an optical system cooperating therewith, the lighting units illuminating portions of the object during operation, each said LED chip supplying a luminous flux of at least 5 lm during operation.
D	at least one lighting module in said housing for illuminating an object outside said housing,		

Turnbull
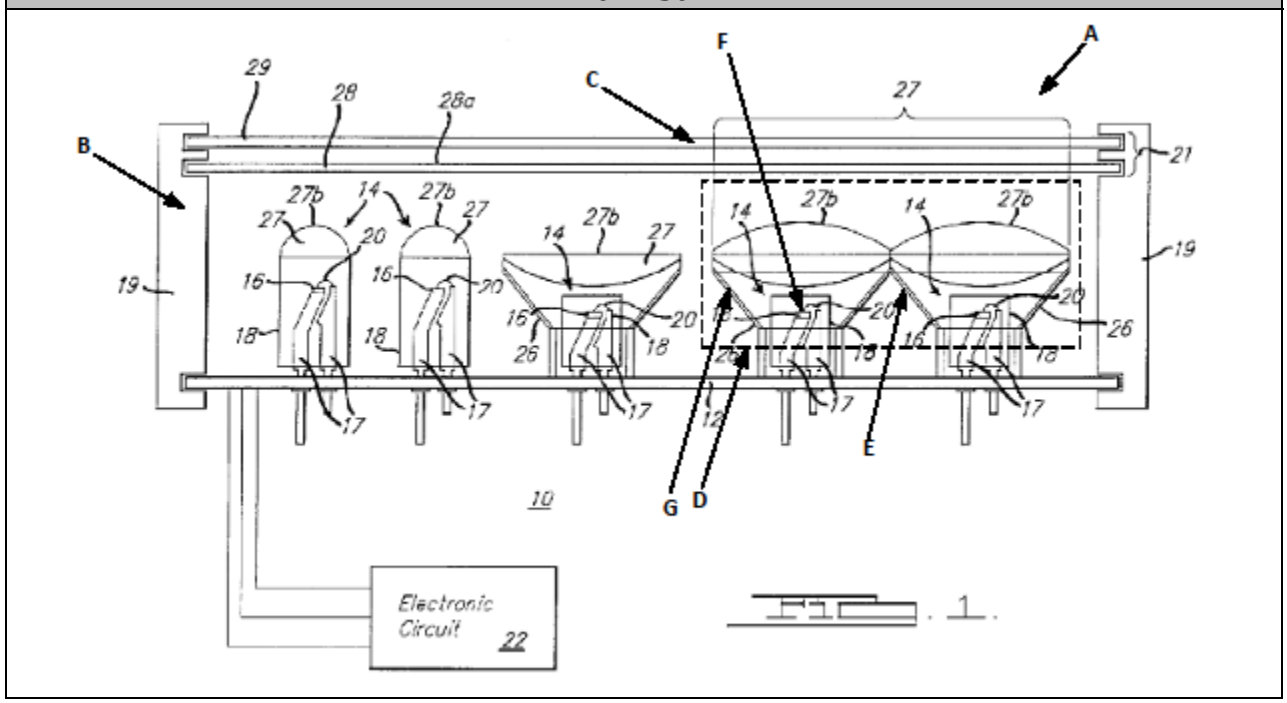

As shown above, Turnbull discloses all of the claimed elements of the luminaire in claim 1 of the ‘774 Patent. Luminaire (A) includes at least one lighting module (D) with housing (B) and light emission window (C). Lighting module (D) comprises a set of lighting units (E), where each lighting unit comprises at least one LED chip (F) and an optical system (G) cooperating therewith, where the lighting units illuminate portions of the object during operation. Turnbull inherently discloses that each said LED chip supplies a luminous flux of at least 5 lm during operation.

The following claim chart compares claim 14 of the ‘774 Patent to Figure 1 of Turnbull.

‘774 Patent Claim 14			
A	A lighting system comprising	**E**	a plurality of lighting units each comprising
B	at least one luminaire comprising a housing	**F**	at least one LED chip and
C	with a light emission window and	**G**	an optical system, said LED chips each supplying a luminous flux of at least 5 lm during operation, said luminous flux being directed through a respective optical system toward respective portion of said object.
D	a lighting module in said housing for illuminating an object outside of said housing said module comprising		

Turnbull

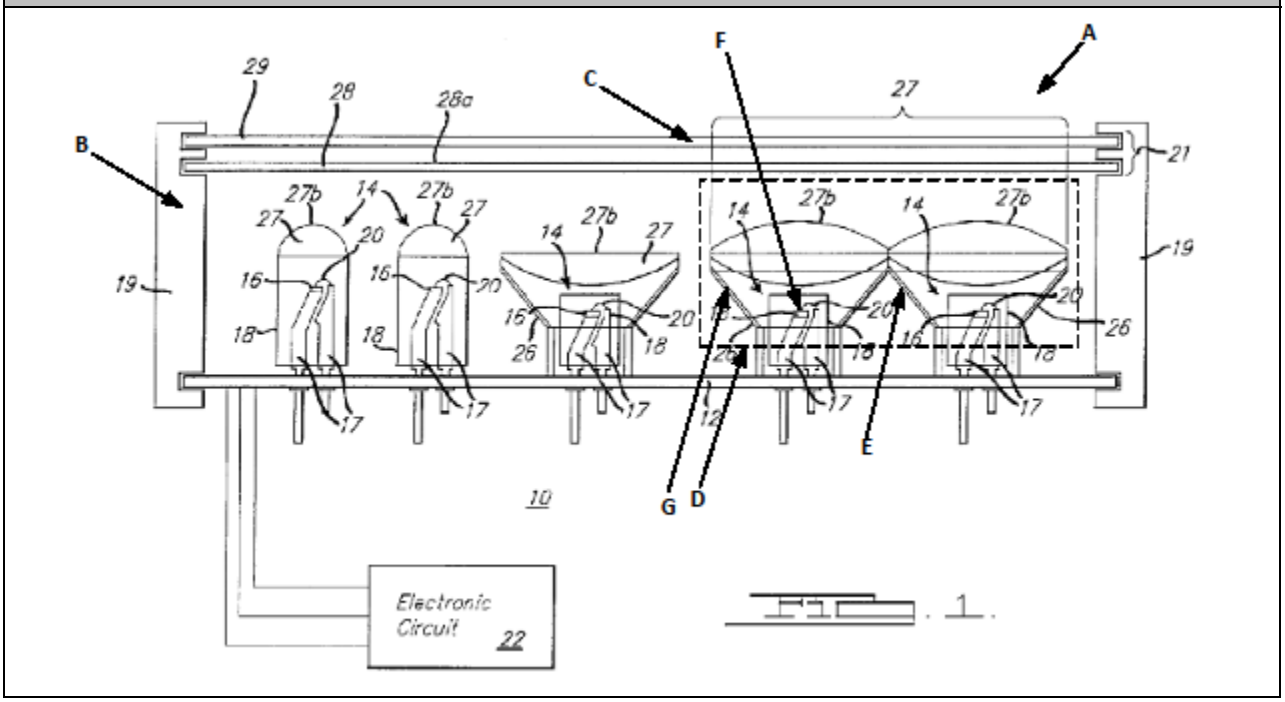

As shown above, Turnbull discloses all of the elements of the lighting system in claim 14 of the ‘774 Patent. Lighting system (A) comprises at least one luminaire

comprising a housing (B) with a light emission window (C) and a lighting module (D) in said housing for illuminating an object outside of said housing. The lighting system further comprises a plurality of lighting units (E) comprising at least one LED chip (F) and an optical system (G). Turnbull inherently discloses the LED chips each supply a luminous flux of at least 5 lm during operation, said luminous flux being directed through a respective optical system toward respective portion of said object.

The Turnbull illuminator invalidates the claims of the '774 Patent, either taken alone or in combination with other prior art references, as explained in further detail below and in the attached Rhoads Declaration (Ex. RGD-1006).

B. Identification of Challenges

Petitioner challenges the validity of claims 1-7 and 9-15 of the '774 Patent as follows:

1. Challenged Claims

Claims 1-7 and 9-15.

2. Statutory Grounds for Challenges

Challenge 1: Claims 1-5, 7, 9 and 11-15 are anticipated under 35 U.S.C. § 102(e) by U.S. Patent No. 5,803,579 to Turnbull (Ex. RGD-1002). Turnbull was filed on June 13, 1996, and issued on September 8, 1998, and thus is prior art to the '774 Patent at least under 35 U.S.C. § 102(e).

Challenge 2: Claims 1-5, 7, 9 and 11-15 are obvious under 35 U.S.C. § 103(a) in view of U.S. Patent No. 5,803,579 to Turnbull (Ex. RGD-1002) and the printed publication entitled "Very high-efficiency semiconductor wafer-bonded transparent-substrate $(Al_xGa_{1-x})_{0.5}In_{0.5}$/GaP light-emitting diodes" published May 23, 1994 by the American Institute of Physics as authored by F.A. Fish et al. ("the Fish Publication," Ex. RGD-1003). The Fish Publication was published on May 23, 1994, and thus is prior art to the '774 Patent at least under 35 U.S.C. § 102(b).

Challenge 3: Claims 1-5, 7, 9 and 11-15 are anticipated under 35 U.S.C. § 102(e) by U.S. Patent No. 5,803,579 to Turnbull (Ex. RGD-1002). Turnbull was filed on June 13, 1996, and issued on September 8, 1998, and thus is prior art to the '774 Patent at least under 35 U.S.C. § 102(e).

Challenge 4: Claim 6 is obvious under 35 U.S.C. § 103(a) in view of U.S. Patent No. 5,803,579 to Turnbull (Ex. RGD-1002) and U.S. Patent No. 4,698,730 to Sakai et al. (Ex. RGD-1005). Sakai was filed on August 1, 1986, and issued on October 6, 1987, and thus is prior art to the '774 Patent at least under 35 U.S.C. § 102(b).

Challenge 5: Claim 10 is obvious under 35 U.S.C. § 103(a) in view of U.S. Patent No. 5,803,579 to Turnbull (Ex. RGD-1002) and U.S. Patent No. 5,130,531 to Ito et al. (Ex. RGD-1004). Ito was filed on June 6, 1990, and issued on July 14, 1992, and thus is prior art to the '774 Patent at least under 35 U.S.C. § 102(b).

3. Claim Construction

This petition presents the following claim analysis in a manner that is consistent with the broadest reasonable construction in light of the specification. *See* 37 C.F.R. § 42.100(b). The words of a claim "are generally given their ordinary and customary meaning." *Phillips v. AWH Corp.*, 415 F. 3d 1303, 1313. In some cases, "the specification may reveal a special definition given to a claim term by the patentee that differs from the meaning it would otherwise possess." *Id.* at 1316.

There is nothing in the specification of the '774 Patent to indicate any special meaning for the claim terms not referenced below. Accordingly, Petitioner specifically construes all claim terms not individually construed below to have their ordinary and customary meaning. Petitioner reserves the right to advocate a different claim interpretation in district court or any other forum as appropriate.

Claim Term	**Relevant Disclosure in the '774 Patent**
[1.0] A luminaire	"The invention relates to a luminaire comprising a housing with a light emission window, and at least one lighting module for illuminating an object accommodated in the housing and comprising a light source and optical means." '774 Patent (Ex. RGD-1001), column 1, lines 5-9.

Based on the relevant disclosure noted above, which is generally consistent with other disclosure in the '774 Patent, in its broadest reasonable construction "luminaire" means "a lighting device."

Claim Term	Relevant Disclosure in the '774 Patent
[1.1] light emission window	"The luminaire 1 shown comprises a housing 10 with a light emission window 11 in which a transparent plate 16 is accommodated." '774 Patent (Ex. RGD-1001), column 5, lines 39-41. "The light emission window has a first and a second further transparent plate 346′, 346″ which extend transversely to the longitudinal axis and behind which further lighting units 320′, 320″ are positioned." '774 Patent (Ex. RGD-1001), column 7, line 66 through column 8, line 2.

Based on the relevant disclosure noted above, which is generally consistent with other disclosure in the '774 Patent, in its broadest reasonable construction "light emission window" means "a structure through which light can be emitted."

Claim Term	Relevant Disclosure in the '774 Patent
[1.3] lighting unit	"According to the invention, the lighting module comprises a set, for example a few dozen, of lighting units which each comprise at least one LED chip and an optical system cooperating therewith, the LED chips and optical systems forming the light source and the optical means, respectively, while the lighting units illuminate portions of the object during operation, and the LED chips each supply a luminous flux of at least 5 lm during operation." '774 Patent (Ex. RGD-1001), column 1, lines 34-41.

Based on the relevant disclosure noted above, which is generally consistent with other disclosure in the '774 Patent, in its broadest reasonable construction "lighting unit" means "at least one LED chip and an optical system optically coupled with the LED chip."

Claim Term	Relevant Disclosure in the '774 Patent
[1.4] lighting module	"According to the invention, the lighting module comprises a set, for example a few dozen, of lighting units …." '774 Patent (Ex. RGD-1001), column 1, lines 34-35.

Based on the relevant disclosure noted above, which is generally consistent with other disclosure in the '774 Patent, in its broadest reasonable construction "lighting module" means "at least two lighting units."

C. Unpatentability of Claims 1-7 and 9-15 of the '774 Patent

Claim 1: A luminaire comprising

1. Turnbull describes a lighting device or "luminaire." In the Background of the Invention, Turnbull notes a desire "to provide a highly reliable, low-voltage, long-lived, LED illuminator capable of producing white light with sufficient luminous intensity to illuminate subjects of interest well enough to be seen …." (Turnbull, 7:19-22). Turnbull's disclosure and invention were directed to LED illuminators for vehicles, portable lighting and specialty lighting capable of producing white light with sufficient luminous intensity to illuminate subjects of interest well enough to be seen. (Turnbull, 10:14-17). Thus, the illuminator described throughout in Turnbull and as specifically illustrated in FIG. 1 at reference numeral or item 10 is a "luminaire." (See Declaration of Greg M. Rhoads, RGD-1006 "Rhoads", ¶ 20).

a housing with a light emission window

2. FIG. 1 of Turnbull shows an LED illuminator that includes a housing (item 19 in FIG. 1, 11:1-3) with a light emission window (item 21 in FIG. 1). Turnbull teaches "optical elements 21 are preferably incorporated in illuminator 10 to improve illuminator performance or appearance." (11:52-54). Turnbull further teaches:

> "one or more optional secondary optical elements 21 are used with the above described conventional discrete LED designs (FIG. 1) or with LED array die-on-board designs (FIG. 2). Secondary optical elements 21 are components that influence by combination of refraction, reflection, scattering, interference, absorption and diffraction the projected beam shape or pattern, intensity distribution, spectral distribution, orientation, divergence and other properties of the light generated by the LEDs" (13:49-58).

As discussed above, Turnbull's illuminator 10 includes both a housing 19 and a light emission window, where Turnbull's light emission window 21 is specifically taught to influence the projected beam shape or pattern of light. Thus, Turnbull also teaches a luminaire having "a housing with a light emission window." (See Rhoads ¶ 21).

at least one lighting module in said housing for illuminating an object outside said housing

3. Turnbull provides an illuminator (item 10), having at least one lighting module in the housing (item 19) for illuminating an object outside of the housing 19. As shown below and as taught by Turnbull for each LED (item 16) in FIG. 1, "the

emission of all the LEDs is aligned or otherwise focused on a common spot at some predetermined distance away from the illuminator 10." (11:4-6). Thus, Turnbull also teaches a luminaire having "at least one lighting module in said housing for illuminating an object outside said housing." Turnbull teaches a plurality of lighting modules (one of which is circled below in FIG. 1). (See Rhoads ¶ 22).

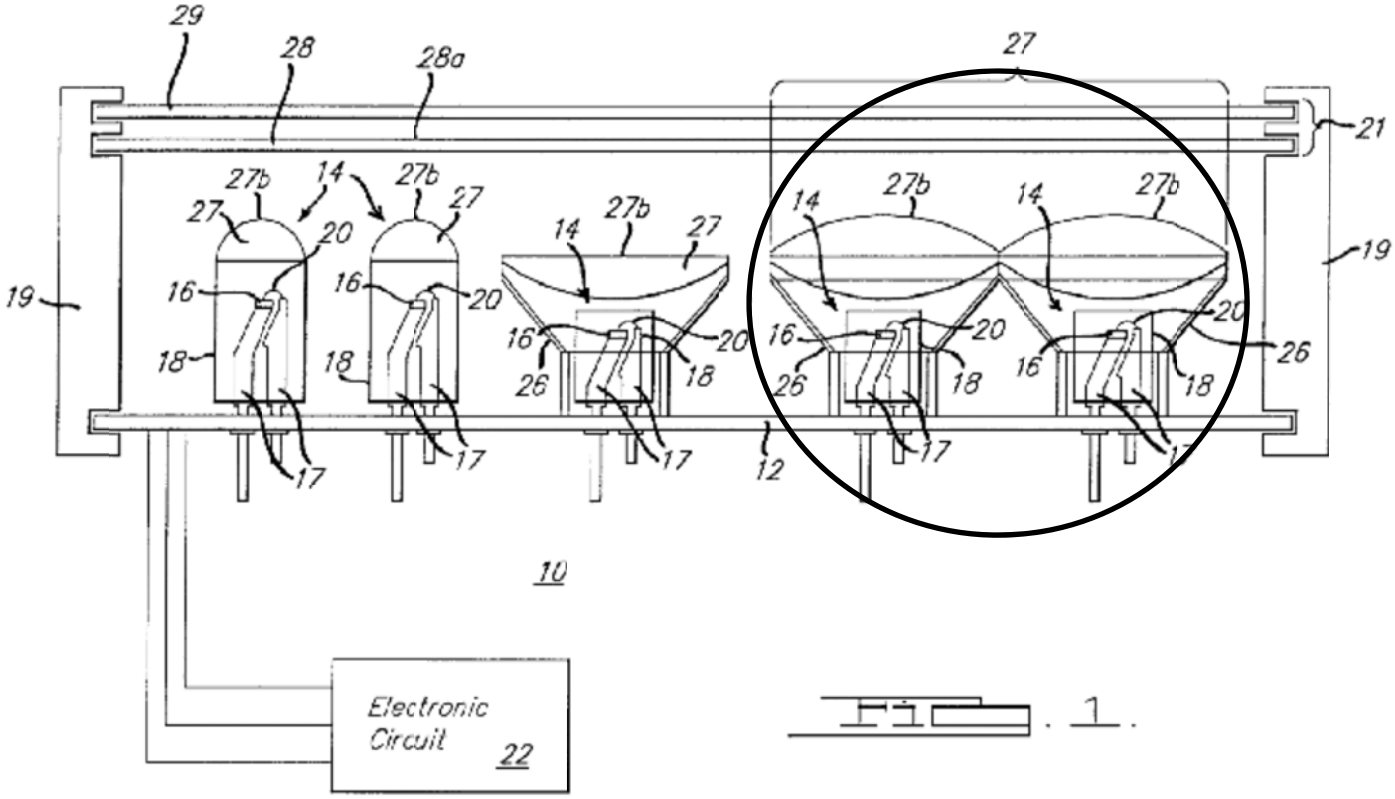

the lighting module comprising a set of lighting units, each lighting unit comprising at least one LED chip and an optical system cooperating therewith

4. Turnbull provides a lighting module comprising a set of lighting units, a set of which is circled in Turnbull's FIG. 1 above, where each lighting unit of the set comprises at least one LED chip (item 16) and an optical system (item 26) cooperating with the LED chip. Turnbull teaches that "the purpose of the reflector 26 is to collect or assist in the collection of light emitted by the LED chip 16 and project it toward the area to be illuminated in a narrower and more intense beam than otherwise would occur." (12:66 – 13:3). Thus, Turnbull also teaches a luminaire having a "lighting module comprising a set of lighting units, each lighting unit comprising at least one LED chip and an optical system cooperating therewith." (See Rhoads ¶ 23).

the lighting units illuminating portions of the object during operation, each said LED chip supplying a luminous flux of at least 5 lm during operation

5. Turnbull does not specifically state that each LED chip emits a luminous flux of at least 5 lm during operation. However, Turnbull does teach that

> "the two preferred types of LEDs for the present invention have very high luminous efficacy in terms of light emitted compared to electrical power consumed. These are transparent substrate AlInGaP amber LEDs available from Hewlett Packard Inc., Optoelectronics Division …." (21:32-37).

Turning to the Fish Publication (RGD-1003), a paper authored by employees of Hewlett Packard Inc., Optoelectronics Division, discusses a new development of a new family of transparent-substrate (TS) AlInGaP LEDs "whose luminous

performance exceeds that of all other current LED technologies …." (1:16-17). The Fish Publication further teaches that TS AlInGaP LEDs are capable of emitting a luminous flux of 11.5 lm at 100 mA. (FIG. 2). Considering that the Fish Publication was published on May 23, 1994, roughly two and a half years before the priority date of the '774 Patent, one of ordinary skill in the art would have known to combine the TS AlInGaP LEDs of the Fish Publication with the teachings of Turnbull, especially since Turnbull explicitly states that TS AlInGaP amber LEDs from Hewlett Packard Optoelectronics Division, the very LEDs mentioned in the Fish Publication, are preferred for their "very high luminous efficacy in terms of light emitted compared to electrical power consumed." (21:34-35). (See Rhoads ¶ 26).

6. The only difference between the teachings of Turnbull and claim 1 of the '774 Patent is that a luminous flux of at least 5 lm is required from the LED of claim 1 of the '774 Patent, which is an LED characteristic already taught in the prior art (e.g., the Fish Publication). Since the Fish Publication teaches LEDs that are capable of emitting a luminous flux of up to 11.5 lm, which is a range that includes 5 lm as required by claim 1 of the '774 Patent, the combination of Turnbull and the Fish Publication would have rendered the subject matter of claim 1 of the '774 Patent obvious to a person of ordinary skill in the art at the time the invention of the '774 Patent was made. (See Rhoads ¶ 27).

7. Turnbull teaches the use of TS AlInGaP amber LEDs from Hewlett Packard Optoelectronics Division (21:34-35), which are the very LEDs mentioned in the Fish Publication. When these LEDs are illuminated with a 50-70 mA operating current as specified in Turnbull (32:12-13), a luminous flux of at least 5 lm is necessarily produced by the LEDs as taught by the Fish Publication. (See FIG. 2 of the Fish Publication). Accordingly, "supplying a luminous flux of at least 5 lm during operation" is an LED characteristic that is inherently anticipated by Turnbull. (See Rhoads ¶ 28).

8. These limitations of claim 1 of the '774 Patent are functional limitations and, therefore, do not serve to distinguish the apparatus of claim 1 of the '774 Patent from the apparatus taught in Turnbull. Furthermore, these functional limitations recite the intended use of the "lighting units" and "LED chips" of the '774 Patent and MPEP § 2114 precludes the use of such recitations to differentiate the claimed apparatus of the '774 Patent from the apparatus taught in Turnbull. Thus, all of the structural limitations of claim 1 of the '774 Patent were taught by Turnbull prior to the priority date of the '774 Patent. (See Rhoads ¶ 24).

9. Nevertheless, Turnbull does teach that "the emission of all the LEDs is aligned or otherwise focused on a common spot at some predetermined distance away from the illuminator 10." (11:4-6). So, the functional limitation of

"illuminating portions of the object during operation" with respect to lighting units of claim 1 of the '774 Patent is taught by Turnbull. (See Rhoads ¶ 25).

Claim 2. A luminaire as claimed in claim 1, wherein the set of lighting units comprises at least two types of lighting units for generating beams which widen more and less strongly.

10. Turnbull teaches "in accordance with the present invention, the plurality of conventional discrete LEDs 14 and individual LED chips 16 consist of two types whose emissions exhibit perceived hues or dominant wavelengths which are color-complementary and distinct from one another and which combine to form a metameric white light." (14:61-66). Accordingly, Turnbull also teaches "the set of lighting units comprises at least two types of lighting units."

11. Turnbull also teaches:

> "a diffuser 29 may be mounted on or attached to the housing 19 or otherwise attached to or made integral with the lens surface 27b or the deviator surface 28a and is used to aesthetically hide and physically protect the illuminator internal components, and/or to filter the spectral composition of the resultant illuminator beam, and/or narrow, broaden or smooth the beam's intensity distribution." (14:16-22).

As can be seen from FIG. 1 and the teaching of Turnbull above, each resultant illuminator beam may be narrowed or broadened through use of a lens surface (item 27b) for each illuminator. The '774 Patent teaches that "generating beams which

widen more and less strongly" means that the beam angle may be widened or narrowed according to the type of lighting unit. For example, lighting units 20a, 20b and 20c have beam angles of 0.012 sr, 0.043 and 0.06 sr, respectively. (6:21-33). Accordingly, the functional limitation of "generating beams which widen more and less strongly" is taught by Turnbull. (See Rhoads ¶ 30).

Claim 3. A luminaire as claimed in claim 1 wherein the optical system of the lighting units comprises a primary and a secondary optical system, said primary optical system being provided with a primary reflector on which the LED chip is provided and with a transparent envelope in which the LED chip is embedded, said secondary optical system being provided with a secondary reflector in whose comparatively narrow end portion the LED chip is positioned.

12. Turnbull teaches " a miniature reflector cup (not shown) may also be located adjacent to the chip 16 to further improve light extraction from the device." (11:18-20). Accordingly, while Turnbull does not illustrate "a primary reflector on which the LED chip is provided," Turnbull nevertheless clearly teaches such a limitation in Turnbull's specification. Turnbull further teaches "a clear, tinted, or slightly diffused polymer matrix enclosure 18 is used to suspend, encapsulate, and protect the chip 16, lead frame 17, optional reflector cup (not shown) and wire conductor 20 and to provide certain desirable optical characteristics." (11:20-25). As shown in FIG. 1 of Turnbull, a polymer matrix enclosure (item 18 indicated by

inner circle) is also taught by Turnbull. Turnbull also teaches a reflector (item 26 indicated by outer circle), which as can be seen from FIG. 1, has a narrow end portion within which the LED (item 16) is positioned. Accordingly, Turnbull also teaches "a primary and a secondary optical system, said primary optical system being provided with a primary reflector on which the LED chip is provided and with a transparent envelope in which the LED chip is embedded, said secondary optical system being provided with a secondary reflector in whose comparatively narrow end portion the LED chip is positioned." (See Rhoads ¶ 31).

Claim 4. A luminaire as claimed in claim 3, characterized in that the secondary reflector supports a lens at an end opposite the comparatively narrow end portion.

13. As illustrated in FIGs. 1 and 2, Turnbull teaches a lens (item 27) that is supported by a reflector (item 26). Turnbull teaches "[a] more integrated and optimized system is therefore possible by virtue of the flexibility to place individual LED chips 16 within very close proximity to one another on the support member 12 and within very close proximity to reflector 26, lens 27 …." (12:15-19). Turnbull further teaches "reflector 26, if used, is normally a conical, parabolic, or elliptical reflector and typically is made of metal or metal-coated molded plastic." (12:64-66). Reflector 26, while not explicitly taught in Turnbull to support lens 27, is nevertheless taught by Turnbull to be a structure that is capable of supporting lens

27. As illustrated in the FIGs. 1 and 2, reflector 26 is necessarily taught to support lens 27 as shown, since Turnbull is silent as to any other structure that would provide such support. Accordingly, Turnbull also teaches "the secondary reflector supports a lens at an end opposite the comparatively narrow end portion." (See Rhoads ¶ 32).

Claim 5. A luminaire as claimed in claim 1 wherein the optical system of the lighting unit comprises a transparent body with a first optical part which deflects the light generated by the LED chip through refraction and a second optical part which deflects the light generated by the LED chip through reflection.

14. Turnbull teaches "deviator 28 may be optionally mounted on or attached to the housing 19 or otherwise attached to or made integral with the lens surface 27b … Deviator 28 is normally a molded clear polycarbonate or acrylic prism operating in refractive mode for deviation angles up to about 35 degrees or in TIR mode (such as a periscope prism) for deviation angles in excess of 35 degrees" (13:64-14:6). Turnbull defines TIR to mean "total-internal-reflection." (13:35-36). Accordingly, Turnbull teaches an optical system having a transparent (clear) body that operates in both a refractive mode and a reflective mode. Turnbull, therefore, also teaches an "optical system of the lighting unit comprises a transparent body with a first optical part which deflects the light generated by the LED chip through refraction and a second optical part which deflects the light generated by the LED chip through reflection." (See Rhoads ¶ 33).

Claim 6. A luminaire as claimed in claim 5, characterized in that the transparent body has a wide end and opposite thereto a comparatively narrow end portion, in which end portion the LED chip is embedded, while the side of the LED chip remote from the wide end of the transparent body is provided on a primary reflector, said transparent body having a spherical portion which is centrally positioned relative to an axis, which is recessed into the wide end, and which forms the first optical part, while the body has a peripheral portion around the axis with a paraboloidal circumferential surface around the axis which forms the second optical part.

15. The '774 Patent in FIG. 5 illustrates transparent body 149 having a wide end 149_c and a comparatively narrow end portion 149_f. LED chip 130 is embedded in the end portion 149_f on primary reflector 141. Transparent body 149 has a spherical portion 149_d that is centrally positioned relative to axis 144 and is recessed into wide end 149_c to form the first optical part. Transparent body 149 has a peripheral portion around the axis 144 with a parabolic circumferential surface 149_b forming the second optical part.

The "Sakai" reference (RGD-1005), however, teaches a similar structure as shown in FIG. 1. In particular, Sakai teaches:

> "upper portion of the light-emitting element 11 and both lead frames 12 are molded with a light-transparent resin to a lens portion 15 having a spherical end surface at the end

> portion 15a from which the light emitted from the light-emitting element 11 is emitted …. A cap 16 to be fitted to the above-described light-emitting diode is made of the same material as the lens portion 15 or of a light-transparent material such as glass. The cap 16 is formed in a cup-like configuration having a planar upper surface 16a and a central hollow portion 17 into which the lens portion 15 is inserted or fitted. End portion 15a and upper surface 16a together comprise an illumination output portion of the light-emitting diode …. The peripheral surface 16b of the cap 16 is formed in a parabolic curve having a focal point at the light-emitting element 11. Therefore, all of the light emitted from the light-emitting element 11 and not directed to the end surface 15a is reflected by the cap 16 to the forward direction approximately in parallel with the optical axis X." (3:19-45).

Turnbull teaches "a clear, tinted, or slightly diffused polymer matrix enclosure 18 is used to suspend, encapsulate, and protect the chip 16, lead frame 17, optional reflector cup (not shown) and wire conductor 20 and to provide certain desirable optical characteristics … enclosure 18 also acts as an integral optical element such as a lens 27, deviator 28 or diffuser 29." (11:20-51). (See Rhoads ¶ 34).

16. One of ordinary skill in the art would have known to construct the polymer matrix enclosure 18 of Turnbull using the teachings of Sakai, so as to provide certain desirable optical characteristics – namely, to control the light emitted by Turnbull's LED chip 16 either by Sakai's cap 16 or end surface 15a such that "all of the light emitted from the light-emitting element 11 and not directed to the end surface 15a is reflected by the cap 16 to the forward direction approximately in

parallel with the optical axis X." (3:42-45). Accordingly, the combination of Turnbull and Sakai teach that "transparent body has a wide end and opposite thereto a comparatively narrow end portion, in which end portion the LED chip is embedded, while the side of the LED chip remote from the wide end of the transparent body is provided on a primary reflector, said transparent body having a spherical portion which is centrally positioned relative to an axis, which is recessed into the wide end, and which forms the first optical part, while the body has a peripheral portion around the axis with a paraboloidal circumferential surface around the axis which forms the second optical part." (See Rhoads ¶ 35).

Claim 7. A luminaire as claimed in claim 1 wherein components of the optical systems of different lighting units are mutually integrated.

17. The '774 Patent discusses "components 247, here formed by reliefs, of optical systems 240 of individual lighting units 220 have been integrated into a transparent plate 246 provided in the light emission window 211." (7:20-24). FIG. 7 of the '774 Patent illustrates the integration of components 247 within transparent plate 246.

Turnbull similarly teaches "optical elements 21 comprise one or more of a lens 27, a deviator 28, and a diffuser 29, each of which may be in conventional form or otherwise in the form of a micro-groove Fresnel equivalent, a HOE, binary optic or TIR equivalent, or another hybrid form." (13:58-63). Optical element 21 of

Turnbull's FIG. 1 shows optical elements 21 are integrated for each lighting unit of Turnbull's illuminator 10. Accordingly, Turnbull also teaches that "components of the optical systems of different lighting units are mutually integrated." (See Rhoads ¶ 36).

Claim 9. A luminaire as claimed in claim 7 wherein the integrated components of the optical systems are reliefs in a transparent plate in the light emission window.

18. The '774 Patent discusses:

> "reliefs 247 split up the beams generated by the LED chips into two beams diverging from one another. In a modification, the light beams generated by the LED chips are split up into more, for example four beams. In another modification, the beams generated by the LED chips are not split up but, for example, deflected or widened." (7:24-29).

Accordingly, "reliefs" as defined in the '774 Patent are either used to split, deflect, or widen the beams generated by the LEDs. Turnbull similarly teaches:

> "optical elements 21 are components that influence by combination of refraction, reflection, scattering, interference, absorption and diffraction the projected beam shape or pattern, intensity distribution, spectral distribution, orientation, divergence and other properties of the light generated by the LEDs." (13:53-58).

Accordingly, Turnbull also teaches "the integrated components of the optical systems are reliefs in a transparent plate in the light emission window." (See Rhoads ¶ 37).

Claim 10. A luminaire as claimed in claim 9, characterized in that the relief is formed by ridges.

19. The '774 Patent discusses that "relief 347 is formed by ridges of triangular cross-section …." (7:55-56). The '774 Patent further discusses that reliefs are optical elements that are either used to split, deflect, or widen the beams generated by the LEDs. (7:24-29). Turnbull similarly teaches

> "optical elements 21 are components that influence by combination of refraction, reflection, scattering, interference, absorption and diffraction the projected beam shape or pattern, intensity distribution, spectral distribution, orientation, divergence and other properties of the light generated by the LEDs ... optical elements 21 comprise … a micro-groove Fresnel." (13:53-61).

Thus, Turnbull's optical element 21 may comprise a micro-groove Fresnel lens. An example of a micro-groove Fresnel lens having ridges of a triangular cross section (circled) is shown below in FIG. 6 of U.S. Patent No. 5,130,531 ("Ito", RGD-1004). Ito further teaches "two Fresnel lens sections 41 and 42 are integrally fabricated in a surface of the mold resin 9" (8:27-28) and that mold resin 9 is optically transparent (8:11). One of ordinary skill in the art would have known to construct the optical elements 21 of Turnbull through use of the micro-groove Fresnel lens 41 of Ito

having ridges of triangular cross section, especially since Turnbull specifically teaches that optical elements 21 may comprise a micro-groove Fresnel. Accordingly, the combination of Turnbull with Ito teaches that "the relief is formed by ridges." (See Rhoads ¶ 38).

Fig.6

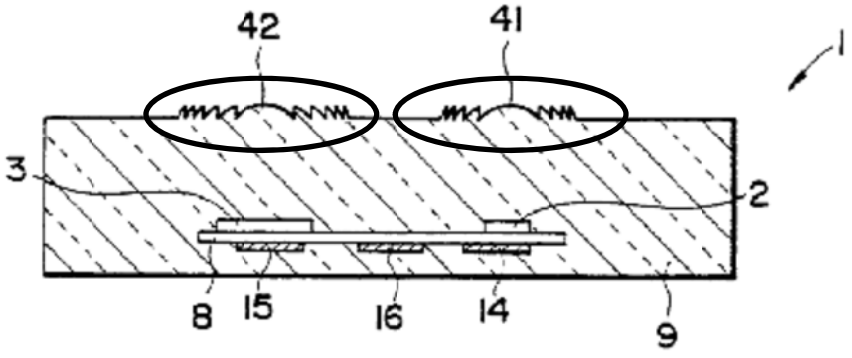

Claim 11. A luminaire as claimed in claim 1 wherein the set of lighting units comprises two or more varieties of lighting units for illuminating portions of the object with mutually differing spectra.

20. Turnbull teaches "[i]n accordance with the present invention, the plurality of conventional discrete LEDs 14 and individual LED chips 16 consist of two types …." (14:61-63). Accordingly, Turnbull also teaches "the set of lighting units comprises two or more varieties of lighting units."

21. Turnbull further teaches "[i]n accordance with the present invention, the plurality of conventional discrete LEDs 14 and individual LED chips 16 consist of two types whose emissions exhibit perceived hues or dominant wavelengths which are color-complementary and distinct from one another and which combine to form a metameric white light." (14:61-66). Thus, Turnbull teaches two types of emissions with dominant wavelengths that are distinct from one another. Accordingly, the functional limitation "for illuminating portions of the object with mutually differing spectra" is also taught by Turnbull. (See Rhoads ¶ 40).

Claim 12. A luminaire as claimed in claim 11, characterized in that the set of lighting units comprises a first variety of lighting units for illuminating central portions of the object with a spectrum having a maximum at a first wavelength, and a second variety of lighting units for illuminating peripheral portions of the object with a spectrum having a maximum at a second wavelength which is smaller than the first wavelength.

22. As discussed above in paragraph 20, Turnbull teaches first and second varieties of lighting units. The limitations "for illuminating central portions of the object with a spectrum having a maximum at a first wavelength" and "for illuminating peripheral portions of the object with a spectrum having a maximum at a second wavelength which is smaller than the first wavelength" are functional limitations that are of no significance to the apparatus claim 12 of the '774 Patent at

least because they define the intended use of the lighting units of claim 12. Such intended-use limitations cannot differentiate over Turnbull. (See Rhoads ¶ 41).

23. Nevertheless, Turnbull further teaches "FIG. 9 further depicts a first embodiment of the present invention utilizing a combination of one or more LEDs whose emissions have peak wavelengths of approximately 650 nm and 500 nm …." (20:33-37). Turnbull also teaches that " another object of the present invention is to provide an illuminator assembly projecting an effective photopic white illumination within a central zone and mesopic illumination in a surrounding zone." (7:48-51). Still further, Turnbull teaches "a white color should be projected throughout the Photopic illuminance zone … the illuminator may be allowed to project slightly non-white colors into the surrounding Mesopic illuminance zone." (30:10-17). Accordingly, Turnbull teaches that white light is to be projected into the central zone and non-white light may be projected into the peripheral zone. Furthermore, since white light may contain higher wavelengths than do non-white colors, Turnbull also teaches that central portions of the object may be illuminated with a spectrum having a maximum at a first wavelength, and peripheral portions of the object may be illuminated with a spectrum having a maximum at a second wavelength which is smaller than the first wavelength. (See Rhoads ¶ 42).

13. A luminaire as claimed in claim 12, characterized in that the first wavelength lies in a range from 550 to 610 nm and the second wavelength in a range from 500 to 530 nm.

24. Turnbull teaches "a first embodiment of the present invention utilizing a combination of one or more LEDs whose emissions have peak wavelengths of approximately 650 nm and 500 nm and perceived hues of red and green. As the diagram shows, this produces a "white" light …." (20:33-37). Turnbull, however, further discusses:

> "[i]t should be understood that a similar mixture of red-orange or red LED light (with a peak wavelength between 600 nm and 635 nm or between 635 and 680 nm, respectively) with a complementary green LED light (with a peak wavelength between 492 nm and 530 nm) or a mixture of yellow-green or yellow LED light (with a peak wavelength between 530 nm and 572 nm) with a purple-blue or blue LED light (with a peak wavelength between 420 nm and 476 nm) can be made to function in the same manner to produce similar results and are included in the scope of this embodiment of the present invention." (20:58-21:1).

Accordingly, Turnbull teaches first and second wavelengths that fall within the ranges 550-610 and 500-530, respectively. (See Rhoads ¶ 43).

Claim 14: A lighting system comprising

25. Turnbull describes a "lighting system." In the Background of the Invention, Turnbull notes a desire "to provide a highly reliable, low-voltage,

long-lived, LED illuminator capable of producing white light with sufficient luminous intensity to illuminate subjects of interest well enough to be seen …." (Turnbull, 7:19-22). Turnbull's disclosure and invention were directed to LED illuminators for vehicles, portable lighting and specialty lighting capable of producing white light with sufficient luminous intensity to illuminate subjects of interest well enough to be seen. (Turnbull, 10:14-17). Thus, the illuminator described throughout in Turnbull and as specifically illustrated in FIG. 1 is a "lighting system." (See Rhoads ¶ 44).

at least one luminaire comprising a housing with a light emission window

26. FIG. 1 of Turnbull shows an LED illuminator that includes a housing (item 19 in FIG. 1, 11:1-3) with a light emission window (item 21 in FIG. 1). Turnbull teaches "optical elements 21 are preferably incorporated in illuminator 10 to improve illuminator performance or appearance." (11:52-54). Turnbull further teaches:

> "one or more optional secondary optical elements 21 are used with the above described conventional discrete LED designs (FIG. 1) or with LED array die-on-board designs (FIG. 2). Secondary optical elements 21 are components that influence by combination of refraction, reflection, scattering, interference, absorption and diffraction the projected beam shape or pattern, intensity distribution, spectral distribution, orientation, divergence and other properties of the light generated by the LEDs" (13:49-58).

As shown below and discussed above, Turnbull's illuminator includes both a housing and a light emission window, where Turnbull's light emission window 21 is specifically taught to influence light projection. Thus, Turnbull also teaches "at least one luminaire comprising a housing with a light emission window." (See Rhoads ¶ 45).

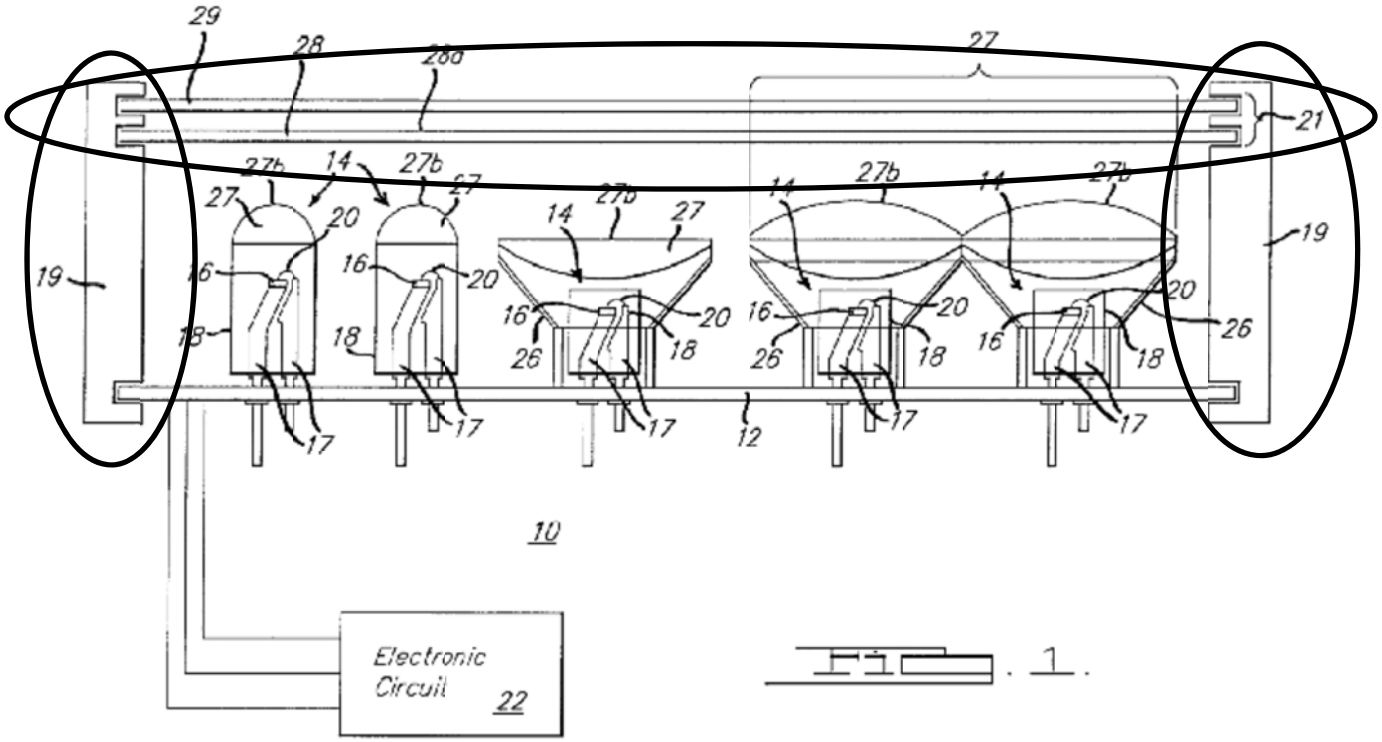

FIG. 1.

and a lighting module in said housing for illuminating an object outside of said housing

27. Turnbull provides illuminator (item 10) having a lighting module, circled below in FIG. 1, in the housing (item 19) for illuminating an object outside of the housing. As shown below and as taught by Turnbull for each LED (item 16) in

FIG. 1, "the emission of all the LEDs is aligned or otherwise focused on a common spot at some predetermined distance away from the illuminator 10." (11:4-6). Thus, Turnbull also teaches a luminaire having "and a lighting module in said housing for illuminating an object outside said housing." (See Rhoads ¶ 46).

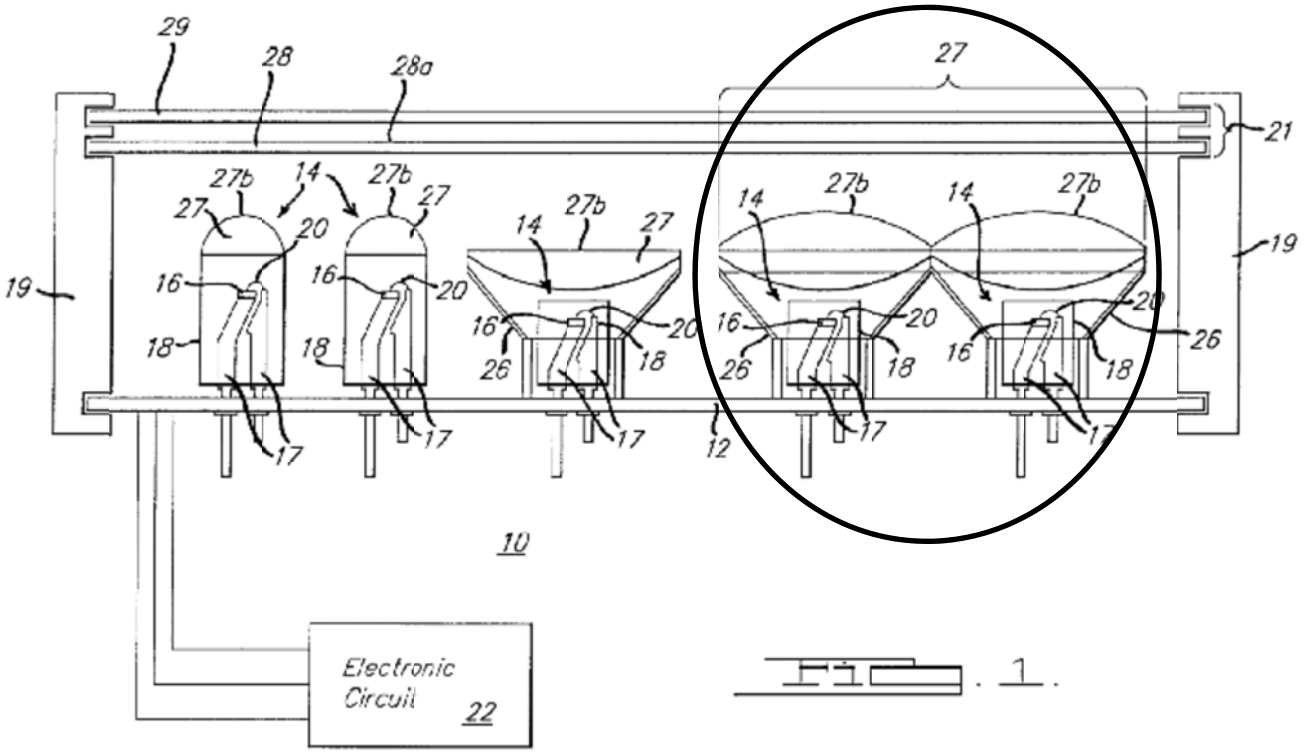

FIG. 1.

said module comprising a plurality of lighting units each comprising at least one LED chip and an optical system

28. Turnbull provides a lighting module comprising a plurality of lighting units, one of which is circled in Turnbull's FIG. 1 below, where each lighting unit comprises at least one LED chip (item 16) and an optical system (item 26). Turnbull

teaches that " the purpose of the reflector 26 is to collect or assist in the collection of light emitted by the LED chip 16 and project it toward the area to be illuminated in a narrower and more intense beam than otherwise would occur." (12:66 – 13:3). Thus, Turnbull also teaches a luminaire having a "module comprising a plurality of lighting units each comprising at least one LED chip and an optical system." (See Rhoads ¶ 47).

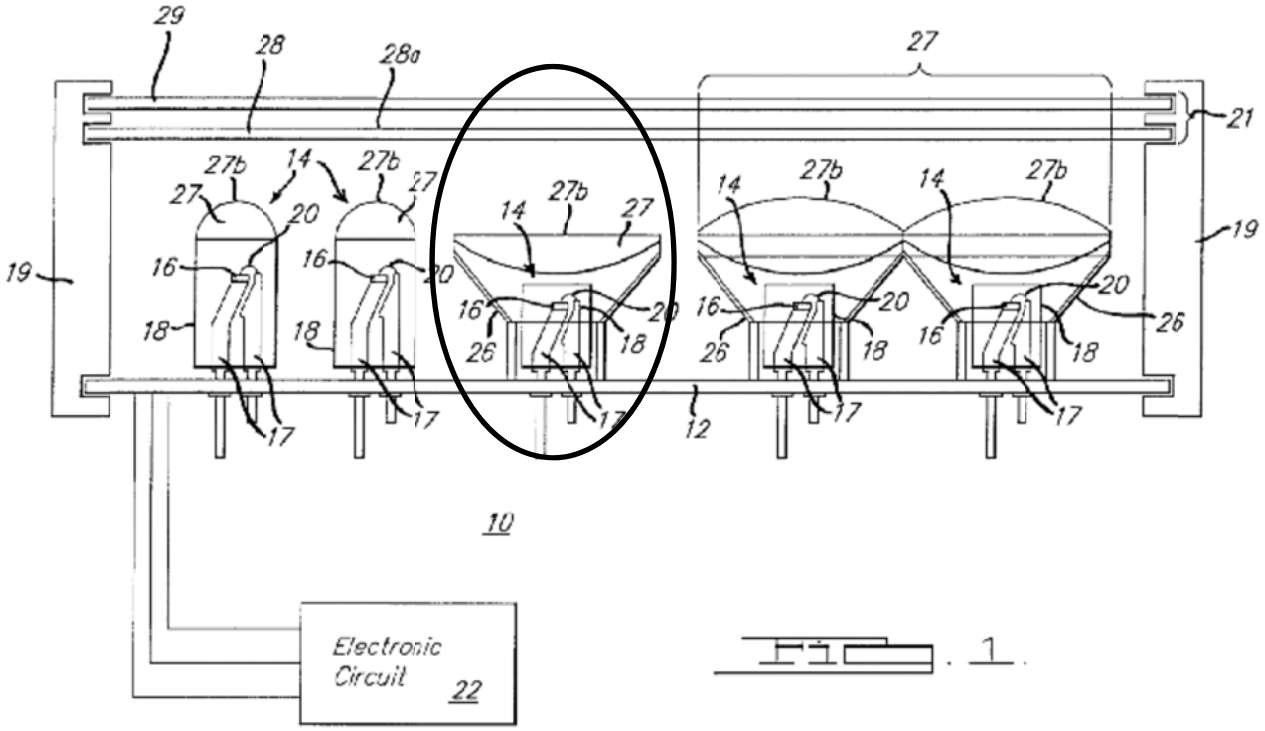

said LED chips each supplying a luminous flux of at least 5 lm during operation, said luminous flux being directed through a respective optical system toward respective portion of said object.

29. Turnbull does not specifically teach that each LED chip emits a luminous flux of at least 5 lm during operation. However, Turnbull does teach that

> "the two preferred types of LEDs for the present invention have very high luminous efficacy in terms of light emitted compared to electrical power consumed. These are transparent substrate AlInGaP amber LEDs available from Hewlett Packard Inc., Optoelectronics Division …." (21:32-37).

Turning to the Fish Publication (RGD-1003), a paper authored by employees of Hewlett Packard Inc., Optoelectronics Division, discusses transparent-substrate (TS) AlInGaP LEDs "whose luminous performance exceeds that of all other current LED technologies …." (1:16-17). The Fish Publication further teaches that TS AlInGaP LEDs are capable of emitting a luminous flux of 11.5 lm at 100 mA. (FIG. 2). Considering that the Fish Publication was published on May 23, 1994, roughly two and a half years before the priority date of the '774 Patent, one of ordinary skill in the art would have known to combine the TS AlInGaP LEDs of the Fish Publication with the teachings of Turnbull, especially since Turnbull explicitly states that TS AlInGaP amber LEDs from Hewlett Packard Optoelectronics Division, the very LEDs mentioned in the Fish Publication, are preferred for their "very high luminous efficacy in terms of light emitted compared to electrical power consumed." (21:34-35). (See Rhoads ¶ 50).

30. The only difference between the teachings of Turnbull and claim 14 of the '774 Patent is that a luminous flux of at least 5 lm is required from the LED of

claim 14 of the '774 Patent, which is an LED characteristic already taught in the prior art (e.g., the Fish Publication). Since the Fish Publication teaches LEDs that are capable of emitting a luminous flux of up to 11.5 lm, which is a range that includes 5 lm as required by claim 14 of the '774 Patent, the combination of Turnbull and the Fish Publication would have rendered the subject matter of claim 14 of the '774 Patent obvious to a person of ordinary skill in the art at the time the invention of the '774 Patent was made. (See Rhoads ¶ 51).

31. Turnbull teaches the use of TS AlInGaP amber LEDs from Hewlett Packard Optoelectronics Division (21:34-35), which are the very LEDs mentioned in the Fish Publication. When these LEDs are illuminated with a 50-70 mA operating current as specified in Turnbull (32:12-13), a luminous flux of at least 5 lm is necessarily produced by the LEDs as taught by the Fish Publication. (See FIG. 2 of the Fish Publication). Accordingly, "supplying a luminous flux of at least 5 lm during operation" is an LED characteristic that is inherently anticipated by Turnbull. (See Rhoads ¶ 52).

32. These limitations of claim 14 of the '774 Patent are functional limitations and, therefore, do not serve to distinguish the apparatus of claim 14 of the '774 Patent from the apparatus taught in Turnbull. Furthermore, these functional limitations recite the intended use of the "LED chips" of the '774 Patent and MPEP § 2114 precludes the use of such recitations to differentiate the claimed apparatus of

the ‘774 Patent from the apparatus taught in Turnbull. Thus, all of the structural limitations of claim 14 of the ‘774 Patent were taught by Turnbull prior to the priority date of the ‘774 Patent. (See Rhoads ¶ 48).

33. Nevertheless, Turnbull does teach that “the emission of all the LEDs is aligned or otherwise focused on a common spot at some predetermined distance away from the illuminator 10.” (11:4-6). So, the functional limitation of “luminous flux being directed through a respective optical system toward respective portion of said object” with respect to claim 14 of the ‘774 Patent is taught by Turnbull. (See Rhoads ¶ 49).

Claim 15. A lighting system as in claim 14 wherein each said luminaire comprises a plurality of said lighting modules in said housing, said lighting system further comprising means for controlling said lighting modules independently of each other.

34. Turnbull teaches a plurality of lighting modules. In addition, Turnbull teaches an electronic circuit (item 22 of FIG. 1) which “is operable to energize, control and protect the LEDs 14, and manipulate and manage the illumination they produce.” (11:38-40). Turnbull further teaches with regard to FIG. 21:

> “the microprocessor U1 can manage and manipulate the output from LEDs D1-D5. For example, by removing any voltage from port 0 the base voltage to Q1 will be zero and no light will be emitted from D1-D3 and only light emitted

> from D4-D5 will illuminate the interior of the vehicle. Similarly, the voltage from port 1 can be removed and only amber light will illuminate the interior of the vehicle." (32:24-31).

Thus, Turnbull teaches a "lighting system further comprising means for controlling said lighting modules independently of each other." (See Rhoads ¶ 53).

V. Conclusion

For the reasons set forth above and in the attached Expert Declaration, Petitioner has established a reasonable likelihood of prevailing with respect to at least one claim of the '774 Patent. Indeed, Petitioner has set forth multiple independent *prima facie* cases of anticipation and obviousness to claims 1-7 and 9-15 of the '774 Patent. Therefore, Petitioner asks that the Patent Trial and Appeal Board order an *Inter Partes* Review trial and then proceed to cancel claims 1-7 and 9-15.

Dated: June 18 , 2014

Respectfully submitted,

/Michael T. Wallace/

Michael T. Wallace
Registration No. 45,420

JST Performance, Inc.
d/b/a Rigid Industries
Customer No. 116181
Telephone: (480) 655 0100 x1067
Facsimile: (480) 832 0606

UNITED STATES PATENT AND TRADEMARK OFFICE

BEFORE THE PATENT TRIAL AND APPEAL BOARD

JST Performance, Inc. d/b/a/ Rigid Industries
Petitioner,

v.

U.S. PHILIPS CORPORATION
Patent Owner

Patent No. 6,250,774 (Claims 1-7 and 9-15)
Issued: June 26, 2001
Inventors: Begemann, et al
Title: Luminaire
Inter Partes Review No. IPR2014-00874

CERTIFICATE OF SERVICE

The undersigned certifies, in accordance with 37 C.F.R. § 42.205, that service was made on the Patent Owner as detailed below:

Date of Service	June 18, 2014
Manner of Service	FEDERAL EXPRESS
Documents Served	Petition for *Inter Partes* Review Exhibit RGD-1006
Persons Served	U.S. PHILIPS CORPORATION F. BRICE FALLER 580 WHITE PLAINS ROAD TARRYTOWN, NY 10591

/Michael T Wallace/

_____

Michael T. Wallace
Registration No. 45,420